REFINED GEOMETRIC TRANSITION AND LOCAL $\mathbb{P}^2$

by

Bilal Çark

B.S., Physics, Boğaziçi University, 2018

Submitted to the Institute for Graduate Studies in
Science and Engineering in partial fulfillment of
the requirements for the degree of
Master of Science

Graduate Program in Physics

Boğaziçi University

2022

ACKNOWLEDGEMENTS

I would like to thank my advisor Can Kozçaz for his support, for the talks that inspired me a lot to learn more and for his patience.

I would also like to thank my family, friends and colleagues for being supportive during this longer than expected period, especially Türkü, for helping me a lot dealing with anxiety and inner struggles.

ABSTRACT

REFINED GEOMETRIC TRANSITION AND LOCAL $\mathbb{P}^2$

In this thesis, the approaches for calculating refined topological string amplitudes on compact Calabi-Yaus for the case local $\mathbb{P}^2$ are investigated. One approach is making use of large N duality and refined Chern-Simons theory (Aganagic and Shakirov) and the other is defining another vertex (Iqbal, Kozçaz). It turns out that this new vertex can be obtained from refined Chern-Simons theory using properties of Macdonald and Schur functions, in this thesis we outline the way of this derivation. Aside from a brief review of topological strings, large N duality and knot invariants that can be calculated using Chern-Simons theory, a review of topological vertex formalism and its derivation using Chern-Simons theory, both in the refined and unrefined case is included.

ÖZET

RAFİNE GEOMETRİK GEÇİŞ VE LOKAL $\mathbb{P}^2$

Bu tezde rafine topolojik sicim teorisi büyüklüklerinin kompakt Calabi-Yau geometrileri üzerindeki hesaplamalarının iki farklı yolu, lokal $\mathbb{P}^2$ geometrisi örneği üzerinde incelenmektedir. Bu hesaplama yollarından biri büyük N ikiliğini ve rafine Chern-Simons teorisi hesaplamalarını kullanmak (Aganagic and Shakirov), diğeri ise yeni bir verteks tanımlamaktır (Iqbal, Kozçaz). Bu tezde tanımlanan bu yeni verteksin aslında diğer yöntemle ilişkili olduğu ve rafine Chern-Simons teorisi hesaplamalarından nasıl türetilebileceğinin gösterimi yer almaktadır. Bu tezde topolojik sicim teorisi, büyük N ikiliği, düğüm değişmezleri ve Chern-Simons teorisi üzerine kısa bir özetin yanı sıra, hem rafine hem de rafine olmayan versiyon için topolojik verteks yöntemi ve topolojik verteksin Chern-Simons teorisi kullanılarak türetilmesi yer almaktadır.

TABLE OF CONTENTS

ACKNOWLEDGEMENTS iii
ABSTRACT iv
ÖZET v
LIST OF FIGURES vii
LIST OF SYMBOLS ix
LIST OF ACRONYMS/ABBREVIATIONS x
1. INTRODUCTION 1
2. TOPOLOGICAL STRINGS 3
2.1. A-model Topological Strings 5
2.2. Large N Duality 6
2.3. Chern-Simons Theory 10
2.4. Geometric Transition 11
2.5. S, T Matrices 13
2.6. String Theory Amplitudes 14
3. THE TOPOLOGICAL VERTEX 18
3.1. Derivation of the Topological Vertex from Chern-Simons Theory 22
4. THE REFINED TOPOLOGICAL VERTEX 26
4.1. Refined Chern-Simons Theory 28
4.2. Knot Invariants 30
4.3. Derivation of the Refined Topological Vertex 32
4.4. The Conjugate Vertex 37
4.5. The Local P^2 39
4.6. T Vertex 41
4.7. An Outline of Deriving T Vertex from Refined Chern-Simon Theory . . 42
5. CONCLUSION 44
REFERENCES 45
APPENDIX A: COPYRIGHT PERMISSIONS 49

LIST OF FIGURES

Figure 2.1. The index structure of the fields in the adjoint representation. . . 6

Figure 2.2. The cubic vertex in the double line notation. 7

Figure 2.3. A planar diagram with $h = 3$. 8

Figure 2.4. A nonplanar diagram with $g = h = 1$. 8

Figure 2.5. Deformed conifold with an S^3, conifold singularity, resolved conifold. 12

Figure 2.6. A Calabi-Yau that is a $T^2 \times \mathbb{R}$ fibration of $\mathbb{R}^3$. 14

Figure 2.7. The annulus stretching along the degeneracy loci. 16

Figure 2.8. The geometry after the Heegaard splitting. 16

Figure 3.1. Toric graph representing the degeneration locus of the $T^2 \times \mathbb{R}$ fibration of $\mathbb{C}^3$ in the $\mathbb{R}^3$ base parametrized by $(r_\alpha, r_\beta, r_\gamma)$. 19

Figure 3.2. The canonical framing. 21

Figure 3.3. The deformed geometry on the left with open strings streched among branes, the resolved geometry on the right. 22

Figure 3.4. Moving the Lagrangian submanifold with representation Q_1 to the outgoing edge. 24

Figure 4.1. The vertices are glued along the preferred direction ν. 26

Figure 4.2. The vertices are glued along the unpreferred direction λ. 27

Figure 4.3. The T^*S^3 with the shown brane configurations. 32

Figure 4.4. Example of a double Hopf link. 34

Figure 4.5. Analytic continuation in V_1 corresponds to moving L_1. 35

Figure 4.6. C^3 with the shown configuration of refined branes parametrized by q on Lagrangians L_1, L_2, L_3. 36

Figure 4.7. A different choice of brane configuration. 36

Figure 4.8. The brane configuration leading to the conjugate vertex. 38

Figure 4.9. The conjugate vertex. 38

Figure 4.10. Local $\mathbb{P}^2$. 39

Figure 4.11. Assignment of $\epsilon_{1,2}$ parameters to the edges. 41

Figure 4.12. The two vertices need for local $\mathbb{P}^2$. 41

LIST OF SYMBOLS

$\mathcal{N}$	Number of supersymmetries
$Sl(2,\mathbb{Z})$	Special linear group over integers of degree 2
$SU(3)$	Special unitary group of degree 3
$SU(N)$	Special unitary group of degree N
$U(N)$	Unitary group of degree N

LIST OF ACRONYMS/ABBREVIATIONS

AdS-CFT	Anti-de Sitter-Conformal Field Theory Correspondence
BPS	Bogomol'nyi–Prasad–Sommerfield
BRST	Becchi-Rouet-Stora-Tyutin
TN	Taub-Nut Space

1. INTRODUCTION

Topological string theory has many applications in physics and mathematics. One of them is geometric engineering which enables determining properties of five or four dimensional supersymmetric gauge theories via type IIA string theory theory or M-theory compactification [1]. Genus zero amplitudes of the topological string theory side gives the prepotential on the gauge theory side. For $SU(N)$ gauge theories we consider A model topological string theory on toric Calabi-Yau threefolds. There are some great reviews and books involving these subjects [2–6].

Topological vertex formalism is a tool to calculate A model topological string theory amplitudes on toric Calabi-Yau manifolds. Topological vertex is the trivalent vertex of the toric diagram of $\mathbb{C}^3$ and compute the topological string partition function with three stack of D-branes and it can be derived making use of geometric transition and Chern-Simons theory [7]. For a toric diagram, each $\mathbb{C}^3$ patch admits a vertex and by gluing them, we can find open and closed string theory amplitudes for all genus.

Nekresov partition function on the gauge theory side has more detailed information about the spins of BPS states, this lead to refined topological strings [8, 9]. Altough there is no worldsheet derivation for refined topological string theory, it can be defined as a M-theory index in an arbitrary Ω-background [8, 10].

Refined topological vertex of [11] derived using generalization of MacMahon function with two parameters q, t. MacMahon function is related to topological vertex through its combinatorial interpretation with plane partitions introduced by [12]. This derivation of the refined topological vertex demands assignment of q, t parameters on legs of the vertex and choose a preferred direction. Compact toric geometries like local $\mathbb{P}^2$ does not allow this construction consistently, and partition function cannot be calculated directly.

Two separate methods are developed around the same time to find the partition function for such cases. One of them is introducing a new vertex [13] in the cases two legs are assigned with the same parameter. The other method [14] is using refined Chern-Simons theory and geometric transition.

In this thesis an outline of deriving the vertex of [13] from the results of [14] is shown. Both methods are investigated for the case local $\mathbb{P}^2$. Some non-diagonal terms necessarily appear in the refined Chern-Simons theory calculations which are sinked into the new vertex of [13] in which refined topological vertex of [11] used alongside.

2. TOPOLOGICAL STRINGS

Besides Schwarz type topological quantum field theories, for example chern-simons theory in three dimension, we have topological field theories obtained using twisting procedure, cohomological theories, such as topological Yang-Mills theory in four dimension and topological sigma models in two dimensions.

Sigma models are the field theories we integrate over space of maps to a target space. $\mathcal{N} = (2, 2)$ nonlinear sigma model is a superconformal field theory which can be twisted to produce a topological field theory. The difference of topological and regular version of this theory arises when we consider curved spaces. Twisting is changing the Lorentz transformation properties of some of the fields of the supersymmetric field theory we have considered in flat space to keep the supersymmetry on curved spaces (e.g. having a scalar nilpotent supercharge $\mathcal{Q}$, not a spinor).

A topological quantum field theory is a type of quantum field theory in which the correlation functions of some of the fields are metric-independent:

$$\frac{\delta}{\delta g^{\mu\nu}}\langle\phi_{i_1}...\phi_{i_n}\rangle = 0$$

with indices denoting certain quantum numbers. If we are interested in only fields with metric independence, we need above fields such that they are invariant under a symmetry theory possesses, $\delta\phi_i = 0$, and the energy-momentum tensor, $T_{\mu\nu}$ such that $T_{\mu\nu} = \delta G_{\mu\nu}$ in terms of a tensor,

$$\begin{aligned}\frac{\delta}{\delta g^{\mu\nu}}\langle\phi_{i_1}...\phi_{i_n}\rangle &= \langle\phi_{i_1}...\phi_{i_n}T_{\mu\nu}\rangle \\ &= \langle\phi_{i_1}...\phi_{i_n}\delta G_{\mu\nu}\rangle \\ &= \langle\delta(\phi_{i_1}...\phi_{i_n}G_{\mu\nu})\rangle \\ &= 0.\end{aligned}$$

We can ensure, in Lagrangian formulation of the theory, the action and the measure is invariant under such a symmetry.

Considering $\mathcal{N} = 2$ supersymmetry algebra, by redefining Lorentz generator, we can make some supersymmetric charges behaving like scalars, and some of them behaving as vectors. Then, we can obtain a nilpotent operator $\mathcal{Q}$ with momentum operator being $\mathcal{Q}$-exact. Together with R symmetry, which can be redefined to be regarded as ghost number, we have topological algebra.

Considering $\delta\phi_i = 0$ as the symmetry generated by $\mathcal{Q}$, the physical states associated to the topological invariants are chosen to be the states annihilated by $\mathcal{Q}$:

$$\mathcal{Q}|\Psi\rangle = 0$$

which ensures their correlation functions to be topological.

The fact that $\mathcal{Q}$ is nilpotent, $\mathcal{Q}^2 = 0$ says that physical states differ by $\mathcal{Q}$-exact states $|\psi\rangle \sim |\psi\rangle + \mathcal{Q}|\phi\rangle$ must be identified. Thus, the states correspond to cohomology classes of $\mathcal{Q}$.

The redefinition of Lorentz generator can be done in two distinct ways (with their conjugates), which corresponds to A and B model.

Because we have $\mathcal{Q}$ covariantized, with an arbitrary metric on the two dimensional manifold, for A model, $\mathcal{Q}$-invariance of the action and energy-momentum tensor being $\mathcal{Q}$-exact holds.

We then couple the two dimensional twisted sigma model to worldsheet gravity by making the metric dynamic, and integrating over the moduli space of metric we obtain topological string theories. We choose the topological string theory on a Calabi-Yau threefold as target space, it makes it possible to do many nontrivial calculations.

2.1. A-model Topological Strings

Let us consider a nonlinear sigma model in two dimensions. We consider maps from a Riemann surface Σ to a target space X, a three dimensional Kähler manifold with first Chern class $c_1 = 0$. In the twisted model the computation of physical observables reduces to classical questions in geometry. For the A model, the correlation functions can be shown to be localized on holomorphic maps, so that it counts this type of maps from $\Sigma \to X$.

For a Calabi-Yau space X, free energy is generating function of all the holomorphic maps to X. Terms consist of integrals over moduli space $\mathcal{M}$ of that these maps, related to Gromov-Witten invariants of the maps. It turns out from [15] that the genus g free energy of topological string is a generating function for Gromov-Witten invariants $N_{g,\beta}$ of maps from genus g worldsheet Σ_g to X:

$$F_g(t) = \sum_{\beta} N_{g,\beta} Q^{\beta}$$

where $\beta \in H_2(X, Z)$ is denoting the instanton sector topologically classified by the homology class. Let us take S_i, $i = 1, ..., b_2(X)$, as a basis of $H_2(X, Z)$, $\beta = \sum_i n_i [S_i]$ and Betti number $b_2(X)$ integers n_i labels the instanton sectors. $Q^{\beta} = \prod_i Q_i^{n_i}$, $Q_i = e^{-t_i}$. t_i are complexified Kähler parameters $t_i = \int_{S_i} \omega$, where $\omega \in H_{1,1}(X, Z)$ is the complexified Kähler form of X.

Let us introduce a generating function for all-genus free energy:

$$F(g_s, t) = \sum_{g=0}^{\infty} F_g(t) g_s^{2g-2}$$

where g_s is topological string coupling constant which is related to the expectation value of the self-dual graviphoton field.

Gromov-Witten invariants can be computed using some localization techniques [16]. For B model, free energy amplitudes can be calculated using holomorphic anomaly equations [15]. A and B models are related to each other through mirror symmetry.

Consistency of type IIA closed superstring theory says that target space should be ten dimensional. This corresponds to considering maps from Riemann surfaces $\Sigma \to M^{(10)}$. If we consider target spaces $\mathbb{R}^{3,1} \times X^{(6)}$, when size of X is small, by Kaluza-Klein reduction, we can have a four dimensional effective theory. In order to have classical equations of motion, there is Ricci flatness condition on the metric for target space, hold by Calabi-Yau spaces, which corresponds to conformality condition for the worldsheet theory. The case $\mathbb{R}^{3,1} \times X^{(6)}$ with X being Calabi-Yau threefolds is interesting for two reasons, first it makes possible some supersymmetry in four dimensions, determined by the holonomy group of the chosen Calabi-Yau, such as $SU(3)$ for Calabi-Yau threefolds. Second, to have a non-vanishing F_g for $g \neq 1$ we should have Calabi-Yau threefolds. We are also interested in Calabi-Yau threefolds because we can geometrically engineer [1] certain gauge theories by M-theory compactification.

2.2. Large N Duality

In quantum field theories with $U(N)$ or $SU(N)$ gauge symmetry, free energy can be expressed as a power series in $1/N$. In the usual perturbative expansion, Feynman diagrams give polynomials with different powers of N. We can instead use ribbon graphs, also called fatgraphs, to keep track of color indices giving certain powers of N [17].

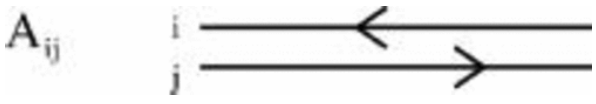

Figure 2.1. The index structure of the fields in the adjoint representation.

In the Figure 2.1, A_{ij} is the gluon field propagator, with $i, j = 1, ...N$ gauge indices in the adjoint representation. Constructing Feynman rules for this double line notation, we can apply them for perturbative expansion of gauge theories such as Chern-Simons theory with the given by the Lagrangian:

$$S = \int_{S^3} A \wedge A + \frac{2}{3} A \wedge A \wedge A$$

for $U(N)$ connection A. The cubic term is given by the following trivalent ribbon graph as in the Figure 2.2:

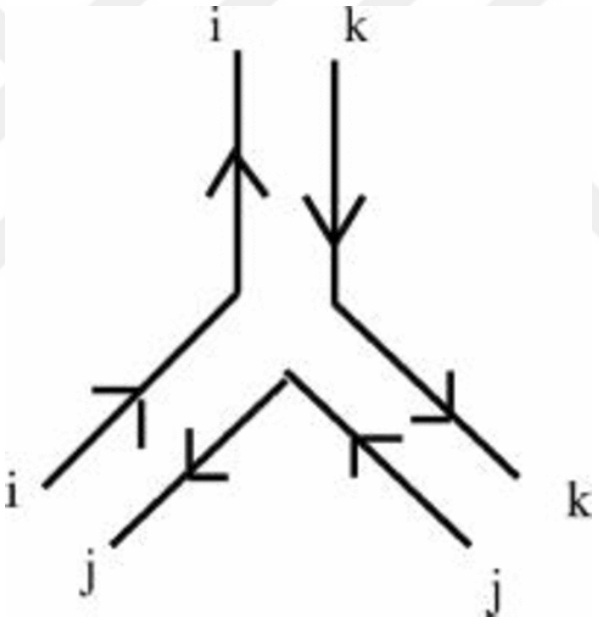

Figure 2.2. The cubic vertex in the double line notation.

For example, the two loop vacuum diagram $\ominus$ which is the contraction of two of these vertices give us two ribbon graphs, giving the factors of N as, $2N^3$ in Figure 2.3 and $-2N$ in Figure 2.4.

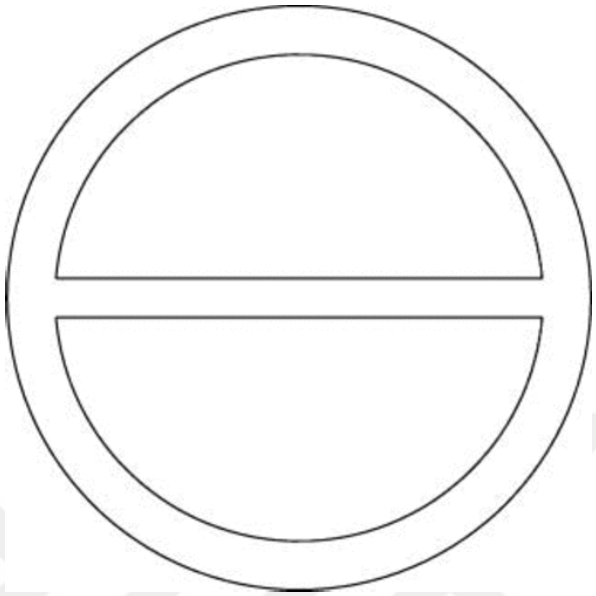

Figure 2.3. A planar diagram with $h = 3$.

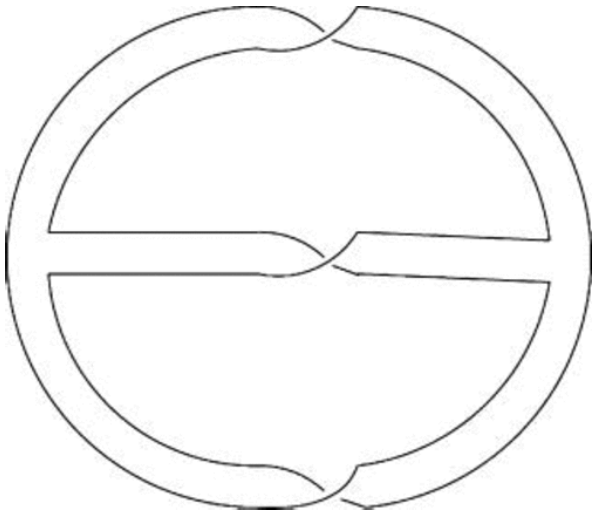

Figure 2.4. A nonplanar diagram with $g = h = 1$.

Fatgraphs can be regarded as Riemann surfaces and topologically categorized by the number of propagators (or edges) E, number of vertices V, and number of holes (or closed loops, or faces). They give the contribution of $x^{E-V}N^h$, where x is the coupling constant. The genus number can be written in terms of their Euler characteristic, which can be expressed in E, V and h, $2g-2 = E-V-h$. So their contribution can be written as:

$$x^{2g-2+h}N^h = x^{2g-2}t^h$$

here $t = Nx$ is the 't Hooft parameter. Taking t fixed, and $N \gg 1$ limit can be considered as a $1/N$ expansion since the N dependence become $(1/N)^{2g-2}$ and low genus fatgraphs dominate in the limit of large N. Fatgraphs that have the same topology as S^2 gives the leading contribution. We can write the perturbative expansion of the gauge theory free energy as

$$F^p = \sum_{g=0}^{\infty}\sum_{h=1}^{\infty} F^p_{g,h}x^{2g-2}t^h.$$

Introducing the function $F^p_g(t) = \sum_{h=1}^{\infty} F^p_{g,h}t^h$, summing over the holes, we can write the perturbative free energy as

$$F^p = \sum_{g=0}^{\infty} x^{2g-2}F^p_g(t)$$

which is the form of closed string amplitude where t is some target space modulus and x is string coupling constant.

2.3. Chern-Simons Theory

Chern-Simons gauge theory is a topological quantum field theory in three dimensions where the action S does not depend on the metric:

$$S = \frac{k}{4\pi} \int_M Tr(A \wedge dA + \frac{2}{3} A \wedge A \wedge A)$$

where k is the coupling constant, M is a three-manifold, A is connection of the gauge group G ($U(N)$ in the cases we are interested in).

The partition function is a topological invariant, also depending on the framing. For three manifolds there is a choice of framing, canonical framing [18], partition function with another framings can be obtained easily from the one in the canonical framing.

We can also calculate invariants of knots and links in three-manifolds [19]. Calculating the holonomy of the gauge connection around an oriented knot K,

$$U_K = Pexp \oint_K A$$

where P stands for path ordering.

We can obtain the Wilson loop operator, without a dependency to the metric, for K in an irreducible representation R of $U(N)$:

$$W_R^K(A) = Tr_R U_K.$$

Representations also have a diagrammatic presentation. Lengths of rows ℓ_i in a Young tableau labels R. Defining K^{-1} as opposite oriented knot K, the notation is as follows: $Tr_R U_{K^{-1}} = Tr_R U_K^{-1} = Tr_{\bar{R}} U_K$, where $\bar{R}$ is the conjugate representation of R.

We can also obtain link invariants for a link $\mathcal{L}$ with $K_\alpha, \alpha = 1, ..., L$ as correlation functions of these Wilson operators:

$$W_{R_1...R_L}(\mathcal{L}) = \langle W_{R_1}^{K_1} ... W_{R_L}^{K_L} \rangle.$$

When $R_\alpha = \square$, fundamental representation, and gauge group is $U(N)$ it is related to HOMFLY polynomials, in which $N = 2$ case is the Jones polynomial.

$$W_{\square...\square}(\mathcal{L}) = \lambda^{lk(\mathcal{L})} \frac{\lambda^{1/2} - \lambda^{-1/2}}{q^{1/2} - q^{-1/2}} P_{\mathcal{L}}(q, \lambda)$$

where $lk(\mathcal{L})$ is the linking number, $q = exp(\frac{2\pi i}{k+N})$ and $\lambda = q^N$.

2.4. Geometric Transition

In the topological A model, if worldsheet has boundaries, boundary conditions preserving the BRST symmetry corresponds to mapping boundaries to Lagrangian submanifold L of the target Calabi-Yau X [20]. Having open strings with boundaries on L, for each boundary, we can have N D-branes wrapped on L.

Target space approach tells us we can describe opens strings ending on D-branes, using a string field theory on the D-branes. At low energies, strings being able to end on N branes corresponds to a $U(N)$ gauge theory. [20] For A model topological strings we have $U(N)$ Chern-Simons topological gauge theory as a string field theory on the branes with A interpreted as a string field in the sense that it is a wave function on the space of all maps to the space-time manifold from an open string,

$$S = \int_{S^3} Tr(A \wedge dA + 2/3 A \wedge A \wedge A)$$

for a $U(N)$ connection A. When Lagrangian manifold L is the S^3 in the deformed conifold, we do not need to worry about the correction terms of holomorphic instantons ending on L.

In the A model topological strings, D-branes creates Kähler 2-form flux k. We can think of a 2-cycle C linking Lagrangian L to X and the effect of N branes on L creates $\int_C k = Ng_s$, as the branes behave as a δ-function source $dk = Ng_s\delta(L)$.

Consider the A model on the deformed conifold T^*S^3, we have this flux, Ng_s, on S^2 linking the Lagrangian submanifold S^3.

Following the idea of AdS-CFT, [21] Gopakamur and Vafa conjectured that resolved conifold that has S^2, with volume $t = Ng_S$, look the same from a long distance, as the deformed conifold with S^3 at its core. There is no structure branes could wrap on resolved conifold.

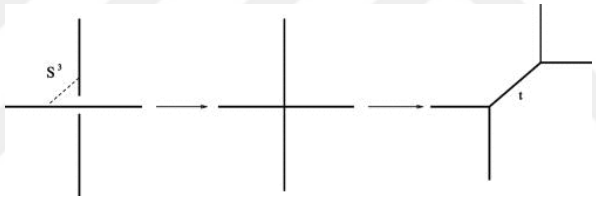

Figure 2.5. Deformed conifold with an S^3, conifold singularity, resolved conifold.

Going from the deformed conifold to the resolved conifold as in the Figure 2.5 is called a geometric transition and the A model partition function does not change.

On the resolved conifold, there are no branes involved, and we simply have $U(N)$ Chern-Simons partition function on S^3, with $g_s = 2\pi i/(k+N)$.

2.5. S, T Matrices

We can associate a Hilbert space $\mathcal{H}(T^2)$ to the boundary of a three-manifold M, when the boundary Σ is T^2. If M admits a Heegaard splitting along the torus, the partition function can be written as:

$$Z(M) = \langle \psi_{M_2} | U_f | \psi_{M_1} \rangle$$

where M_1 and M_2 are three manifolds sharing the boundary, and U_f is an operator such that $U_f : \mathcal{H}(T^2) \to \mathcal{H}(T^2)$.

In [19] it is shown that $\mathcal{H}(\Sigma)$ is the finite dimensional space of Wess-Zumino-Witten model conformal blocks on Σ with G, gauge group, and k, level. And, it corresponds to the integrable representations of the affine Lie algebra of G at level k. We can choose the states $|R\rangle$ to be orthonormal, in the representation R associated to highest weight Λ,

$$\langle R | R' \rangle = \delta_{RR'}.$$

$Sl(2, Z)$ transformations are homeomorphisms of T^2, the generators are S and T matrices given by:

$$T = \begin{pmatrix} 1 & 1 \\ 0 & 1 \end{pmatrix},$$

$$S = \begin{pmatrix} 0 & -1 \\ 1 & 0 \end{pmatrix}.$$

These transformations can be lifted to the Hilbert space, $\mathcal{H}(T^2)$, and can be written as:

$$T_{RR'} = \delta_{RR'} e^{2\pi i(h_p - c/24)},$$

$$S_{RR'} = \frac{i^{|\Delta_+|}}{(k+y)^{r/2}} \left(\frac{Vol\Delta^\omega}{Vol\Delta^r}\right)^{1/2} \sum_{\omega \in W} \epsilon(\omega) \exp(-\frac{2\pi i}{k+y} R.\omega(R')).$$

2.6. String Theory Amplitudes

Consider wrapping N_1 and N_2 D-branes around the S^3s shown as dashed lines in the geometry depicted on the Figure 2.6. We will have two Chern-Simons theories with $U(N_1)$ and $U(N_2)$ gauge groups.

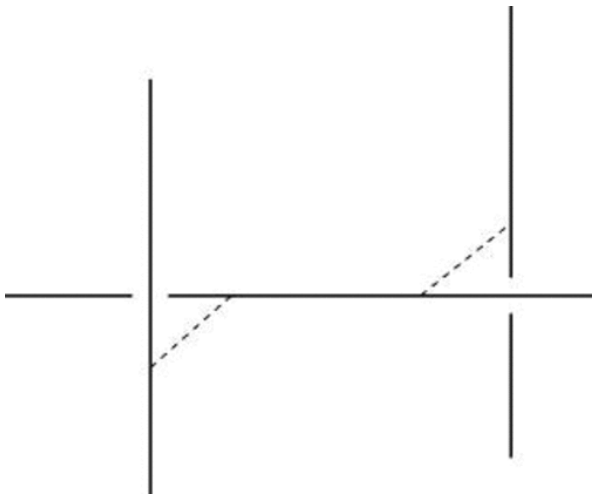

Figure 2.6. A Calabi-Yau that is a $T^2 \times \mathbb{R}$ fibration of $\mathbb{R}^3$.

In the intersection of the two sets of D-branes, there is a complex scalar ϕ in the representation $(N_1, \bar{N}_2)$ because of the stretched bifundamental strings.

The kinetic term for this complex scalar field:

$$\oint_{S_1} \bar{\phi}(d + A_1 + A_2 - r)\phi$$

where complexified Kähler parameter r measures the length of the strings.

We can obtain contribution of this to the Chern-Simons action:

$$\mathcal{O}(U_1, U_2; r) = \exp\left(\sum_{n=1}^{\infty}\left(\frac{e^{-nr}}{n}\right) TrU_1^n \, TrU_2^n\right)$$

U_1 and U_2 are holonomies of $U(N_1)$ and $U(N_2)$ gauge groups around the annulus shown in the Figure 2.7.

Only contribution comes from strings streching along the edges of the toric graph of a geometry. [22–24]

The Chern-Simons action consists of $S_{CS}(A_i)$ contribution of degenerate instantons coupled with contributions of honest holomorphic instantons [20],

$$S = S_{CS}(A_1) + S_{CS}(A_2) + \sum_{n=1}^{\infty}\left(\frac{1}{n}e^{-nr}\right) TrU_1^n \, TrU_2^n$$

A_1 and A_2 are the gauge connections of $U(N_1)$ and $U(N_2)$ on $M_1 = S^3 = M_2$.

We can write the operator $\mathcal{O}(U_1, U_2; r)$ as

$$\mathcal{O}(U_1, U_2; r) = \sum_R Tr_R U_1 e^{-\ell r} Tr_R U_2$$

where $\ell = |R|$ is the number of boxes of the representation R.

Boundaries of the annulus are each a knot on M_1 and M_2, K_1 and K_2 unknots.

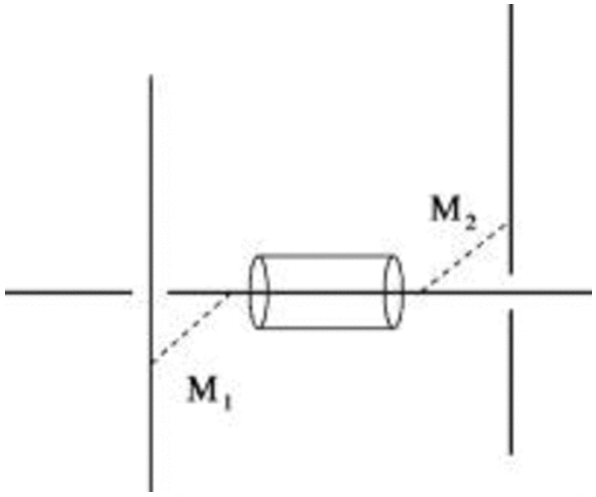

Figure 2.7. The annulus stretching along the degeneracy loci.

The contribution of the nondegenerate instantons to the Chern-Simons total free energy can be written as $\log \sum_R e^{-\ell r} W_R(K_1)\, W_R(K_2)$ and depends on the topology of the knots K_1, K_2 and the framing.

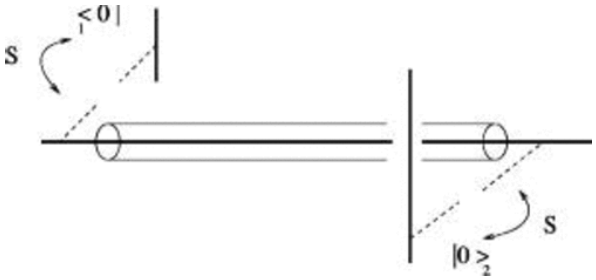

Figure 2.8. The geometry after the Heegaard splitting.

We can apply Heegaard splitting to the two S^3's, then the contributions consist of three pieces, one of them being a solid torus by splitting M_1 gives $\langle 0|_1$ state in the Hilbert space of $U(N_1)$ Chern-Simons on M_1, $H_1^*(T^2)$; and one them being a solid torus by splitting M_2 gives $|0\rangle_2$ state in the Hilbert space of $U(N_2)$ Chern-Simons on M_2 as shown in the Figure 2.8.

We have this operator related to $\mathcal{O}(U_1, U_2, : r)$:

$$\mathcal{O} = \sum_R |R\rangle_1 e^{-lr} \langle R|_2 \in H_1(T^2) \otimes H_2^*(T^2)\,.$$

We can now glue these three pieces using the S transformation, the total partition function:

$$\begin{aligned} {}_1\langle\emptyset|S\mathcal{O}S|\emptyset\rangle_2 &= Z(g_s, N_1, N_2, r) \\ &= \sum_R {}_1\langle\emptyset|S|R\rangle_1 e^{-lr} {}_2\langle R|S|\emptyset\rangle_2\,. \end{aligned}$$

Thus,

$$W_R(K_i) = \frac{S_{\emptyset R}}{S_{\emptyset\emptyset}}(g_s, t_i)$$

for the knots K_i, $i = 1, 2$. Here $g_s = \frac{2\pi}{k_i + N_i}$ is the string coupling constant, $t_i = g_s N_i$ is $U(N_i)$ Chern-Simons theory 't Hooft parameters.

3. THE TOPOLOGICAL VERTEX

Topological strings are introduced by Witten at late 80's [25]. There are methods for computing amplitudes such as using mirror symmetry to transform the problem to an easier one and making use of localization techniques. Although these can give us technically all genus amplitudes, for higher genera the computations get much more unpractical.

The discovery of the large N Chern-Simons/topological string duality at late 90's [21] showed us that Chern-Simons theory amplitudes can give us an efficient way to calculate all genus amplitudes. It is shown that all genus amplitudes of A-model topological strings can be calculated on toric threefolds using its relation to Chern-Simons amplitudes, while taking certain limits [22–24]. These advances eventually led to construction of a building block called topological vertex [7, 26, 27]. The topological vertex formalism is a direct way to compute these amplitudes.

In the topological vertex formalism, non-compact toric Calabi-Yau threefolds are constructed out of $\mathbb{C}^3$s. Let us consider its $T^2 \times \mathbb{R}$ fibration over $\mathbb{R}^3$. We have three Hamiltonian functions and z_i $(i = 1, 2, 3)$ are complex coordinates of $\mathbb{C}^3$,

$$r_\alpha(z) = |z_1|^2 - |z_3|^2 \,,$$

$$r_\beta(z) = |z_2|^2 - |z_3|^2 \,,$$

$$r_\gamma(z) = Im(z_1 z_2 z_3) \,.$$

The base $\mathbb{R}^3$ is parametrized by these Hamiltonians and the fiber $T^2 \times \mathbb{R}$ is parametrized by the flows generated via the symplectic form $w = \sum_i dz_i \wedge d\bar{z}_i$ and Poisson brackets $\delta_\mu z_i = \{r_\mu, z_i\}$, $\mu = \alpha, \beta, \gamma$. r_γ generates the real line $\mathbb{R}$. T^2 is generated by circle actions of r_α and r_γ: $e^{i\alpha r_\alpha + i\beta r_\beta} : (z_1, z_2, z_3) \to (e^{i\alpha} z_1, e^{i\beta} z_2, e^{-i(\alpha+\beta)} z_3)$.

We will take as r_α generates $(0, 1)$ cycle and r_β generates $(1, 0)$ cycle of the torus.

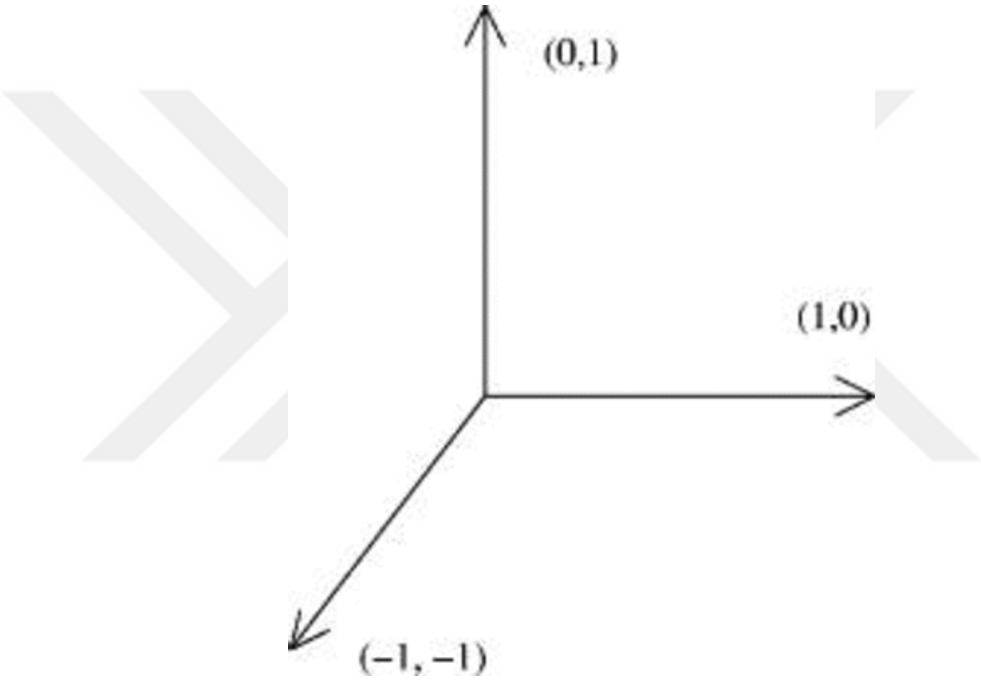

Figure 3.1. Toric graph representing the degeneration locus of the $T^2 \times \mathbb{R}$ fibration of $\mathbb{C}^3$ in the $\mathbb{R}^3$ base parametrized by $(r_\alpha, r_\beta, r_\gamma)$.

Figure 3.1 representing $\mathbb{R}^3$ shows the degeneration locus of the fibration. $(0, 1)$ cycle generated by r_α degenerates over the subspace of $\mathbb{C}^3$, $z_1 = 0, z_3 = 0$, which subspace of the base given by $r_\alpha = r_\gamma = 0, r_\beta \geq 0$. $(1, 0)$ cycle generated by r_β degerates over the subspace of $\mathbb{C}^3$, $z_2 = 0, z_3 = 0$, subspace of the base given by $r_\beta = r_\gamma = 0, r_\alpha \geq 0$. The one-cycle generated by $(\alpha + \beta)$ degenerates over the subspace of $\mathbb{C}^3$, $z_1 = 0, z_2 = 0$, which subspace of the base given by $r_\alpha - r_\beta = r_\gamma = 0, r_\alpha \leq 0$.

We encode the geometry in a toric diagram drawn as in Figure 3.1 taking $r_\gamma = 0$ such that over the line $pr_\alpha + qr_\beta = constant$, $(-q, p)$ cycles of T^2 degenerates.

In the Figure 3.1, the toric graph is drawn choosing the edges ν_i as the positive octant. The $Sl(2,\mathbb{Z})$ geometry in the $\mathbb{C}^3$ geometry, inherited from the T^2, allows different toric graphs can be obtained from the ones in Figure 3.1 ν_i such that $\sum_i \nu_i = 0$. For more general toric geometries this will be needed.

For open string amplitudes on such Calabi-Yau spaces, we need to construct Lagrangian submanifolds providing boundary conditions.

Three Lagragian submanifolds [28] of $\mathbb{C}^3$ with constant $r_i, i = 1, 2, 3$:

$$L_1 : r_\alpha = 0, r_\beta = r_1, r_\gamma \geq 0,$$

$$L_2 : r_\alpha = r_2, r_\beta = 0, r_\gamma \geq 0,$$

$$L_3 : r_\alpha = r_3, r_\beta = r_3, r_\gamma \geq 0.$$

The amplitudes depend on an integer for each boundary with conditions determined by the Lagragian submanifolds. These submanifolds are of the topology of $\mathbb{C} \times S^1$.

Considering N_i number of D-branes on L_i, open topological A-model string partition function in the representation basis

$$Z(V_i) = \sum_{R_1,R_2,R_3} C_{R_1R_2R_3}(q) \prod_{i=1}^{3} Tr_{R_i} V_i$$

where V_i is the holonomy on the ith D-brane around the S^1 and $q = e^{ig_s}$ is the exponentiated topological string coupling constant.

The topological vertex $C_{R_1R_2R_3}$ is a function of string coupling constant, and, in the genus expansion, can be related to the maps from Σ_g with arbitrary genera to C^3 with boundaries on L_i. The vertex, by gluing, can give us closed and open string amplitudes on arbitrary toric geometries.

There is framing dependency of the vertex [29]:

$$C_{R_1R_2R_3}^{f_1-n_1\nu_1,f_2-n_2\nu_2,f_3-n_3\nu_3} = (-1)^{\sum_i n_i\ell(R_i)}\, q^{\sum_i n_i\kappa_{R_i}/2}\, C_{R_1R_2R_3}^{f_1,f_2,f_3}$$

where $\kappa_R = C_R - N\ell(R)$ in terms of the quadratic Casimir C_R of the representation R of U(N). $\ell(R)$ is the number of boxes of R, or the total winding number. For a young tableau with ℓ_i boxes on i-th row, $\ell(R) = \sum_i \ell_i$ and $\kappa_R = \sum_i \ell_i(\ell_i - 2i + 1)$

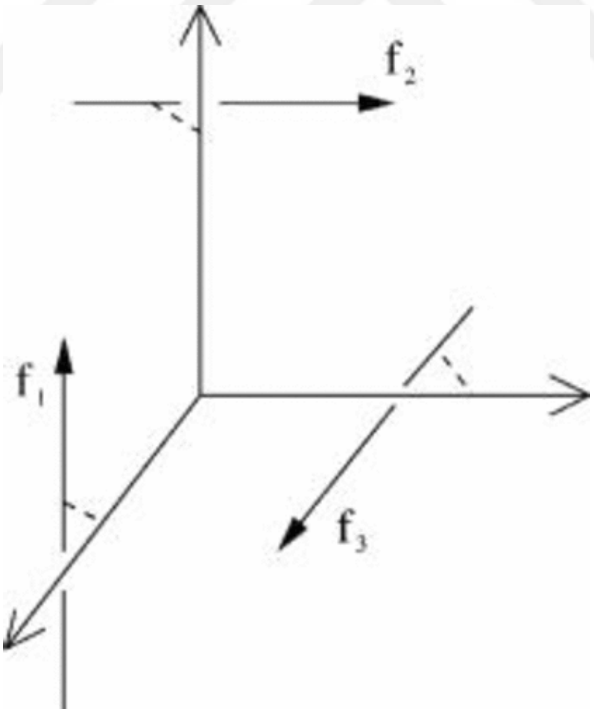

Figure 3.2. The canonical framing.

A suitable choice for the canonical framing is $(f_1, f_2, f_3) = (\nu_1, \nu_2, \nu_3)$, with $\nu_1 = (-1, -1)$, $\nu_2 = (0, 1)$, $\nu_3 = (1, 0)$, as in the Figure 3.2 and other framings can be obtained as $f_i - n_i\nu_i$. By an $Sl(2, \mathbb{Z})$ transformation TS^{-1} takes $(\nu_i, f_i) \to (\nu_{i+1}, f_{i+1})$ and thus we have the cyclic symmetry of the vertex:

$$C_{R_1R_2R_3} = C_{R_3R_1R_2} = C_{R_2R_3R_1}.$$

3.1. Derivation of the Topological Vertex from Chern-Simons Theory

Large N duality says that the open string A model of N D-branes on S^3 in target space $Y = T^*S^3$ is the same as the closed A model strings on $X = \mathcal{O}(-1) \oplus \mathcal{O}(-1) \to \mathbb{P}^1$ [21, 30]. Through geometric transition S^3 and D-branes get replaced by the $\mathbb{P}^1$.

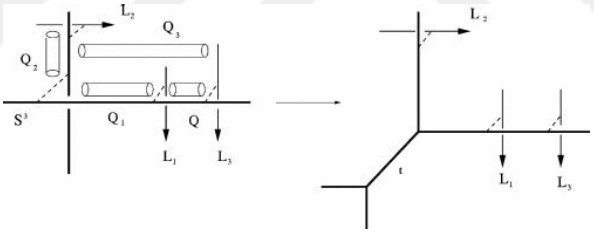

Figure 3.3. The deformed geometry on the left with open strings streched among branes, the resolved geometry on the right.

The theory on S^3 is $U(N)$ Chern-Simons theory with matter fields associated to non-compact Lagrangian submanifolds L_i. In Figure 3.3, we consider D-branes wrapping around S^3 and L_i, with framing indicated by the arrows. After the large N transition of deformed geometry on the left becomes the resolved conifold with a $\mathbb{P}^1$ of size t on the right with D-branes and S^3 disappeared.

$t = Ng_s$, the Kähler parameter of the $\mathbb{P}^1$, is the 't Hooft parameter of the Chern-Simons theory on S^3.

We can relate this right part of Figure 3.3 to the topological vertex with canonical framing, by taking $t \to \infty$, same as taking strictly $N \to \infty$, and by putting L_1 on the other leg on the $\mathbb{C}^3$ we are left with.

Considering T^*S^3 on the left of Figure 3.3, we have N D-branes on the S^3 together with N_1, N_2, N_3 D-branes wrapping on L_1, L_2, L_3. Annuli Q, Q_1, Q_2, Q_3 denotes the bifundamental strings stretched between two distinct Chern-Simons theories. We need to insert corresponding annulus operators to have the partition function due to the branes:

$$Z(V_1, V_2, V_3) = \frac{1}{S_{\emptyset\emptyset}} \sum_{Q,Q_1,Q_2,Q_3} (-1)^{\ell(Q_1)} \langle Tr_{Q_2} U Tr_{Q_1^t \otimes Q_3^t} U \rangle \, Tr_{Q_1} V_1 \, Tr_{Q^t} V_1^{-1} \times Tr_{Q_2} V_2 \, Tr_{Q \otimes Q_3} V_3$$

where $S_{\emptyset\emptyset}$ is the topological string partition function on the dual geometry. V_i and U are the holonomy on D-branes wrapping L_i and S^3. Vacuum expectation value is related to Chern-Simons invariant of the link $S_{\bar{Q}_2 Q_1^t \otimes Q_3^t}/S_{\emptyset\emptyset}$:

$$\langle Tr_{Q_2} U \, Tr_{Q_1^t \otimes Q_3^t} U \rangle = S_{\bar{Q}_2 Q_1^t \otimes Q_3^t}$$

with Wess-Zumino-Witten model S-matrix of $U(N)_k$.

Using the property [19, 31] $S_{\bar{Q}_l Q_i \otimes Q_j} = S_{Q_i \bar{Q}_l} S_{Q_j \bar{Q}_l}/S_{\emptyset \bar{Q}_l}$, we have:

$$Z(V_1, V_2, V_3) = \sum_{Q,Q_1,Q_2,Q_3} (-1)^{\ell(Q_1)} \frac{S_{Q_1^t \bar{Q}_2} S_{Q_3^t \bar{Q}_2}}{S_{\emptyset\emptyset} S_{\emptyset \bar{Q}_2}} \, Tr_{Q_1} V_1 \, Tr_{Q^t} V_1^{-1} \, Tr_{Q_2} V_2 \, Tr_{Q \otimes Q_3} V_3.$$

By taking $N \to \infty$, or t goes to infinity, limit of S matrices $W_{Q_i Q_j} = lim_{t \to \infty} S_{Q_j \bar{Q}_i}/S_{00}$ [24], as Y becomes $\mathbb{C}^3$, the partition function is:

$$Z(V_1, V_2, V_3) = \sum_{Q,Q_1,Q_2,Q_3} (-1)^{\ell(Q_1)} \frac{W_{Q_2 Q_1^t} W_{Q_2 Q_3^t}}{W_{Q_2 0}} Tr_{Q_1} V_1 \, Tr_{Q^t} V_1^{-1} \, Tr_{Q_2} V_2 \, Tr_{Q \otimes Q_3} V_3.$$

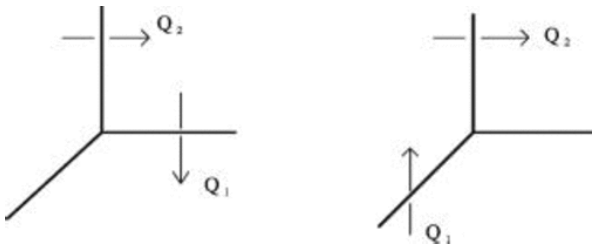

Figure 3.4. Moving the Lagrangian submanifold with representation Q_1 to the outgoing edge.

Let us consider the effect of moving L_1 to the $(-1,-1)$ edge in a simplified case above where we only have L_1 and L_2. The amplitude for the left side of Figure 3.4 is:

$$Z(V_1,V_2)=\sum_{Q_1,Q_2} W_{Q_2Q_1^t}(-1)^{\ell(Q_1)}Tr_{Q_1}V_1\,Tr_{Q_2}V_2.$$

This corresponds to topological vertex amplitude with trivial R_1 and a non-canonical framing $f_3=\nu_1=(-1,-1)\rightarrow f_3=(-1,-1)-(-1)\nu_3=(-1,-1)-(-1)(1,0)=(0,-1)$ with $n_3=-1$ since we can write a noncanonical framing from the canonical choice as $f_i-n\nu_i$.

We can relate the vertex with noncanonical framing to one with canonical choice as

$$C^{0,0,-1}_{0Q_2Q_1}=C_{0Q_2Q_1}(-1)^{\ell(Q_1)}q^{-\kappa_{Q_1}/2}.$$

Thus the conclusion is:

$$C_{0,Q_2,Q_1}=W_{Q_2Q_1^t}q^{\kappa_{Q_1}/2}.$$

The amplitude for the right side of Figure 3.4 is $C_{Q_1,Q_2,0}$. By the cyclic symmetry of the vertex $C_{Q_1Q_20}=C_{0Q_2Q_1}$, $C_{Q_1Q_20}=W_{Q_2^tQ_1}q^{\kappa_{Q_2}/2}$ from the above relation and the S matrix thus W being symmetric.

So going from left to the right on Figure 3.4 we must make the replacement:

$$W_{Q_2Q_1^t}(-1)^{\ell(Q_1)}\,Tr_{Q_1}V_1\,Tr_{Q_2}V_2 \to W_{Q_2^tQ_1}q^{\kappa_{Q_2}/2}\,Tr_{Q_1}V_1^{-1}\,Tr_{Q_2}V_2.$$

In the partition function, the coefficient of $Tr_{R_1}V_1\,Tr_{R_2}V_2\,Tr_{R_3}V_3$ is $C^{0,0,-1}_{R_1R_2R_3}$. Then, the expression of topological vertex amplitude in the canonical framing becomes:

$$C_{R_1R_2R_3} = q^{\frac{\kappa_{R_2}+\kappa_{R_3}}{2}}\sum_{Q_1,Q_3,Q} N^{R_1}_{QQ_1}N^{R_3^t}_{QQ_3}\frac{W_{R_2^tQ_1}W_{R_2Q_3}}{W_{R_2}}.$$

A representation of the topological vertex can be given using skew-Schur functions [12]:

$$C_{R_1R_2R_3} = q^{\kappa_{R_2}/2}s_{R_3^t}(q^{-\rho})\sum_{\eta} s_{R_1^t/\eta}(q^{-\nu-\rho})s_{R_2^t/\eta}(q^{-\nu^t-\rho})$$

where the skew-Schur function $s_{R/\eta}(x)$ can be written in terms of Schur functions as $s_{R/\eta}(x) = \sum_\lambda c^R_{\eta\lambda}s_\lambda(x)$ and $q^{-\nu-\rho} = \{q^{-\nu_1+1/2}, q^{-\nu 2+3/2}, q^{-\nu_3+5/2}, ...\}$.

4. THE REFINED TOPOLOGICAL VERTEX

The idea of generalizing topological vertex depending on two parameters instead of just q has been noted in [8], following the observation that the instanton calculus of [9] has more refined information.

The refined topological vertex on a $\mathbb{C}^3$ patch of a Calabi-Yau threefold is:

$$C_{\lambda\mu\nu}(t,q)=\left(\frac{q}{t}\right)^{||\mu||^2/2}t^{\kappa(\mu)/2}q^{||\nu||^2/2}\tilde{Z}_\nu(t,q)\sum_\eta\left(\frac{q}{t}\right)^{\frac{|\eta|+|\lambda|-|\mu|}{2}}s_{\lambda^t/\eta}(t^{-\rho}q^{-\nu})s_{\mu/\eta}(t^{-\nu^t}q^{-\rho})$$

where $\tilde{Z}_\nu(t,q)=t^{-||\nu^t||^2/2}P_\nu(t^{-\rho};q,t)$ [32]. On a vertex, we must choose a preferred direction and assign q,t parameters on the other two legs, then we can glue in two ways. One is gluing along the preferred direction and and the other option is gluing along one of the unpreferred directions such that if there is q parameter on one side, then there should be t parameter on the other side, or vice versa.

Let us consider an example of type IIA refined string theory compactification on the Calabi-Yau threefold $X=\mathcal{O}(-1)\oplus\mathcal{O}(-1)\to\mathbb{P}^1$. First, we choose to assign q, t parameters on the legs as in Figure 4.1 and choose the preferred direction on the leg which we will glue the vertices.

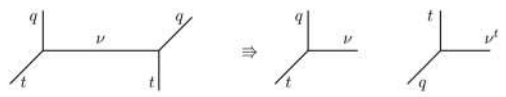

Figure 4.1. The vertices are glued along the preferred direction ν.

Using the refined topological vertex formalism, the refined topological partition function on Calabi-Yau threefold $X = \mathcal{O}(-1) \oplus \mathcal{O}(-1) \to \mathbb{P}^1$ can be written as:

$$Z(t,q,Q) := \sum_{\nu} Q^{|\nu|}(-1)^{|\nu|} C_{\emptyset\emptyset\nu}(t,q) C_{\emptyset\emptyset\nu^t}(q,t)$$

where Q is related to the Kähler parameter such that $T = -\ln(Q)$, which is the size of the $\mathbb{P}^1$.

Putting the appropriate contributions from the vertices, the partition function becomes:

$$Z(t,q,Q) = \sum_{\nu} \frac{Q^{|\nu|}(-1)^{|\nu|} q^{||\nu||^2/2} t^{||\nu^t||^2/2}}{\prod_{s\in\nu}(1-t^{a(s)+1}q^{l(s)})(1-t^{a(s)}q^{l(s)+1})}.$$

If we choose the preferred directions of the vertices differently and glue the vertices on an unpreferred direction as in Figure 4.2, we obtain a different representation of the partition function as:

$$\begin{aligned} Z(t,q,Q) &= \sum_{\lambda} Q^{|\lambda|}(-1)^{|\lambda|} C_{\lambda\emptyset\emptyset}(t,q) C_{\lambda^t\emptyset\emptyset}(q,t) \\ &= \exp\left\{ -\sum_{n=1}^{\infty} \frac{Q^n}{n(q^{n/2}-q^{-n/2})(t^{n/2}-t^{-n/2})} \right\}. \end{aligned}$$

These two representations of the refined topological partition function are equal to each other following the identity (5.4) of [33], that is also derived in [34].

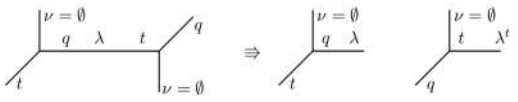

Figure 4.2. The vertices are glued along the unpreferred direction λ.

Using refined topological vertex formalism, we can obtain refined topological string amplitudes for non-compact Calabi Yau threefolds which engineer $\mathcal{N} = 2$ $SU(N)$ supersymmetric gauge theories. The refined topological vertex does not have cyclic symmetry as in the unrefined case. The refined topological vertex assume assignment of q and t parameters on two of the legs which does not work for the cases involving compact toric geometries like local $\mathbb{P}^2$ and partition functions cannot be calculated directly [11].

One solution to that is using refined Chern-Simons theory and geometric transition [14], and another more practical way is introducing a new vertex $T_{\lambda\mu\nu}$ [13].

4.1. Refined Chern-Simons Theory

Refined A-model topological strings is defined as the M-theory index on

$$(X \times TN \times S^1)_{q,t}$$

where X is a Calabi-Yau, TN is the Taub-Nut space. The subscript means there is Ω-deformation on the coordinates of the Taub-Nut space:

$$z_1 \to e^{i\epsilon_1} z_1 := q z_1,\ z_2 \to e^{i\epsilon_2} z_2 := t^{-1} z_2.$$

The index, $Z(M) = Tr(-1)^F q^{S_1 - S_R} t^{S_R - S_2}$ of the compactified theory on $TN \times S^1$ is the M-theory partition function. S_i corresponds to rotation around z_i and S_R is the generator of the R-symmetry, which is added to preserve supersymmetry in the Ω-background.

When $q = t$, $q = e^{g_s}$, the partition function of M-theory defines A-model topological string partition function on X. For $q \neq t$ it defines refined topological string partition function.

To study open strings in A-model topological strings, we have D-branes wrapping Lagrangian submanifolds of X, which corresponds to $M5$ branes wrapping $L \times \mathbb{C} \times S^1$ on M-theory level. We denote the D-branes on the Lagrangian submanifolds with parameters q and $\bar{t}$ depending on which one of the planes, that the complex coordinates of Taub-Nut space creates (z_1 or z_2), corresponding M5 branes wrap.

M5 brane on $L \times \mathbb{C}_q \times S^1 \rightarrow$ branes with parameter q on L.

M5 brane on $L \times \mathbb{C}_{\bar{t}} \times S^1 \rightarrow$ branes with parameter $\bar{t}$ on L.

We have q,t parameters and $\bar{q}$, $\bar{t}$ anti-parameters assigned to the branes, which preserve the same supersymmetries.

String field theory on N D-branes wrapping M, a three manifold inside T^*M, is $SU(N)$ Chern-Simons theory on M, with $q = e^{\frac{2\pi i}{k+N}}$,where level of Chern-Simons theory is k. Here, M is a Lagrangian submanifold of T^*M.

Considering N M5 branes wrapping $M \times \mathbb{C} \times S^1$ in the context of M-theory on $(T^*M \times TN \times S^1)_{q,t}$, the partition function of the refined Chern-Simons theory on M is the index above. When M is a Seifert manifold, R-symmetry applies. The Chern-Simons theory, $SU(N)_q$ or $SU(N)_{\bar{t}}$ we get depends on which one of the complex planes of Taub-Nut space, M5 branes wrap. When we replace (q, t) with (t^{-1}, q^{-1})

$$SU(N)_q \rightarrow SU(N)_{\bar{t}}$$

when there is no knots or links involved. When we insert Wilson loops, they provide new knot invariants. On a Seifert manifold M, we can compute Chern-Simons partition function by cutting and gluing and using S, T matrices which acts on the Hilbert space of the theory on two-torus as in the unrefined case. However, S, T matrices in the refined case depend both and q and t [35, 36].

4.2. Knot Invariants

For a knot in M, we have additional M5 branes wrapping $L_K \times \mathbb{C} \times S^1$, where L_K is a Lagrangian submanifold intersecting M on the knot, $L_K \cap M = K$. Thus, the theory gets a new sector due to M2 branes extending from M to L_K. We can compute annuli amplitudes these M2 branes wrap using the holonomies U, V, on M and L_K, and annulus length Λ. In the unrefined case, it is calculated by

$$\mathcal{O}(\Lambda, U, V) = det(1 - U \otimes V)^{\pm 1}$$

depending on the corresponding D-branes being fermionic or bosonic. In the unrefined case, if the annulus is stretching between two branes with same parameter on both sides, it corresponds to bosonic ground states, -1 on the exponent, and if the annulus is stretching between an anti-parameter on one side, it corresponds to fermionic ground states, $+1$ on the exponent. In the refined case, we also have the distinction between q and t parameters. By replacing, $Tr_R U$, the operators inserting Wilson loop in R representation on branes parametrized by q with Macdonald functions $P_R(U; q, t)$ and on branes parametrized by t with $P_R(U; t^{-1}, q^{-1})$, we have these amplitudes [35, 36]:

$$\mathcal{O}_{q\bar{t}}(\Lambda; U, V) = \sum_R (-\nu^{-1}\Lambda)^{|R|} P_R(U; q, t) P_{R^T}(V^{-1}; t, q),$$

$$\mathcal{O}_{qq}(\Lambda; U, V) = \sum_R \Lambda^{|R|} P_R(U; q, t) P_R(V^{-1}; q, t)/g_R$$

where $v = (q/t)^{1/2}$ and $|R|$ is the number of boxes in the Young tableau of representation R,

$$g_R = \prod_{(i,j)\in R} \frac{1 - t^{R_j^T - i + 1} q^{R_i - j}}{1 - t^{R_j^T - i + 1} q^{R_i - j + 1}}.$$

When L_K is compact $\mathcal{O}_{qq}$ is replaced by O^*_{qq},

$$\mathcal{O}^*_{qq}(\Lambda; U, V) = \sum_R \Lambda^{|R|} P_R(U; q, t) P_R(V^{-1}; q, t)/G_R$$

where G_R is the Macdonald metric and when the number of branes on L_K goes to infinity it reduces to g_R. We can relate the calculations of $SU(N)_q$ refined Chern-Simons theory on M to M-theory index using $\mathcal{O}_{qq}$ and $\mathcal{O}_{q\bar{t}}$ operators. $P_R(U; q, t)$ inserts a Wilson loop in $SU(N)_q$ refined Chern-Simons theory, along the knot K the partition function is the expectation value:

$$Z_{SU(N)_q}(M, K; R) = \langle P_R(U; q, t) \rangle_{SU(N)_q}.$$

M-theory index is $Z(M, K; V)_{qq} = \sum_R Z_{SU(N)_q}(M, K; R)/G_R P_R(V^{-1}; q, t)$ for branes parametrized by q or $Z(M, K; V)_{q\bar{t}} = \sum_R (-1)^{|R|} Z_{SU(N)_q}(M, K; R) P_{R^T}(V^{-1}; q, t)$ for branes parametrized by $\bar{t}$ on L_K, for the simple case M and L_K intersects and $\Lambda = 1$ [35, 36]. We can explicitly write $Z_{SU(N)_q}(M, K; R)$ in terms of S, T matrices if M is a Seifert manifold and K is a Seifert knot.By large N duality, partition function $SU(N)_q$ refined Chern-Simons theory on S^3 and partition function of refined topological string on $Y = \mathcal{O}(-1) \oplus \mathcal{O}(-1) \to \mathbb{P}^1$ are equal to each other, $Z_{SU(N)_q}(S^3; q, t) = Z_Y(Q; q, t)$, with $Q = t^N (t/q)^{1/2}$ [35].

We can compute the partition function $SU(N)_q$ refined Chern-Simons theory on S^3 by the vacuum element of the theory:

$$Z_{SU(N)_q}(S^3; q, t) = \langle 1 \rangle_{SU(N)_q} = S_{\emptyset\emptyset}(N; q, t)$$

with

$$S_{\emptyset\emptyset}(N; q, t) = \frac{i^{N(N-1)/2}}{N^{1/2}(k + \beta N)^{(N-1)/2}} \prod_{m=0}^{\infty} \prod_{\alpha>0} \frac{q^{-m/2} t^{-(\alpha,\rho)/2} - q^{m/2} t^{(\alpha,\rho)/2}}{q^{-m/2} t^{-(\alpha,\rho)/2-1/2} - q^{m/2} t^{(\alpha,\rho)/2+1/2}}.$$

At the large N limit, S_{00} is equal to the partition function the refined topological string on Y,

$$Z_Y(Q;q,t) = exp(-\sum_{n=0}^{\infty} \frac{Q^n}{n(q^{n/2}-q^{-n/2})(t^{n/2}-t^{-n/2})}\,.$$

This holds up to non-perturbative terms of order $e^{-1/N}$, with $Q = t^N(t/q)^{1/2}$ [35].

4.3. Derivation of the Refined Topological Vertex

The refined topological vertex of [11] and [37] can be derived from the refined Chern-Simons theory following similar steps as in the unrefined case.

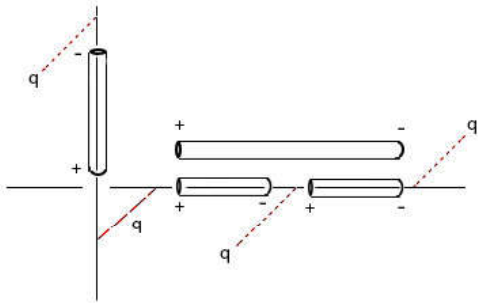

Figure 4.3. The T^*S^3 with the shown brane configurations.

Let us consider $X = T^*S^3$ with N branes parametrized by q on the S^3, which wrap the Lagrangian submanifolds L_1, L_2, L_3. Considering the M2 branes wrapping the annuli between L_2, L_3 and branes on S^3, we should insert $\mathcal{O}_{qq}(U,V_i)$ for each:

$$\mathcal{O}_{qq}(\Lambda,U,V) = \prod_{n=0}^{\infty} \frac{det(1-q^n t\Lambda U\otimes V^{-1})}{det(1-q^n\Lambda U\otimes V^{-1})}$$

where U, V_i are the holonomies on the branes on the S^3 and branes on L_i.

We also have contribution to the M-theory index from the annulus between L_1 and L_2 as a factor of $\mathcal{O}_{qq}(V_1, V_2)$. For the annulus between the S^3 and L_1, we have $\mathcal{O}_{q\bar{q}}(\Lambda) = \prod_{n=0}^{\infty} \frac{det(1-q^n \Lambda U \otimes V^{-1})}{det(1-q^n t \Lambda U \otimes V^{-1})}$, in which $\log \Lambda$ is the mass of the M2 branes.

Thus, before the geometric transition we have the correlator:

$$Z_{SU(N)_q}(S^3, V_1, V_2, V_3) = \langle \mathcal{O}_{q\bar{q}}(U, V_1) \mathcal{O}_{qq}(U, V_2) \mathcal{O}_{qq}(U, V_3) \rangle_{SU(N)_q} \mathcal{O}_{qq}(V_1, V_2).$$

Using

$$\mathcal{O}_{qq}(U, V) = \sum_R P_R(U) P_R(V^{-1}) / g_R$$

and

$$\mathcal{O}_{q\bar{q}}(U, V) = \sum_R P_R(U) i P_R(V^{-1}) / g_R$$

we can make an expansion in link observables for double Hopf link, in which Q_1, Q_2 denotes unknots that are parallel and linked to the unknot denoted by Q_3 [36],

$$\begin{aligned} \langle P_{Q_1}(U) P_{Q_2}(U) P_{R_3}(U) \rangle_{SU(N)_q} &= \sum_R \mathcal{N}^R_{Q_1, Q_2} \langle P_R(U) P_{R_3}(U) \rangle_{SU(N)_q} \\ &= \sum_R \mathcal{N}^R_{Q_1, Q_2} S_{R R_3} \\ &= S_{Q_1 R_3} S_{Q_2 R_3} / S_{0 R_3} \, . \end{aligned}$$

Here, S is the S-matrix of $SU(N)_q$ refined Chern-Simons theory.

Then, taking the large N limit, we we obtain the amplitude for the three branes in $\mathcal{O}(-1) \oplus \mathcal{O}(-1) \to \mathbb{P}^1$. N to infinity limit, gives us $\mathbb{C}^3$ with branes and in this limit:

$$lim_{N \to \infty} t^{-N(|R|+|Q|)/2} S_{RQ} = P_R(t^\rho) P_Q(t^\rho q^Q).$$

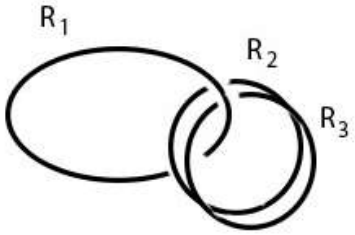

Figure 4.4. Example of a double Hopf link.

After absorbing the factor $t^{-N(|R|+|Q|)/2}$ into the definitions of the holonomies V_i, we have:

$$Z_{C^3}(V_1, V_2, V_3) = \sum_{R_3} P_{R_3}(t^\rho)\mathcal{O}_{q\bar{q}}(t^\rho q^{R_3}, V_1)\mathcal{O}_{qq}(t^\rho q^{R_3}, V_2)\mathcal{O}_{qq}(V_1, V_2)P_{R_3}(V_3^{-1})/g_{R_3}.$$

The next step is moving L_1 to the unoccupied leg. It corresponds to the analytic continuation of V_1 from $V_1 \gg 1$ to $V_1 \ll 1$ and the replacement [36]:

$$\mathcal{O}_{q\bar{q}}(t^\rho q^{R_3}, V_1) \to \mathcal{O}_{q\bar{q}}(t^{-\rho} q^{-R_3}, V_1^{-1}\nu^{-2}).$$

Then, we have the partition function for the refined topological string on $\mathbb{C}^3$ with the branes as:

$$C(V_1, V_2, V_3) = \sum_{R_3} P_{R_3}(t^\rho)\mathcal{O}_{q\bar{q}}(t^{-\rho} q^{-R_3}, V_1^{-1}\nu^{-2})\mathcal{O}_{qq}(t^\rho q^{R_3}, V_2)\mathcal{O}_{qq}(V_1, V_2)P_{R_3}(V_3^{-1})/g_{R_3}.$$

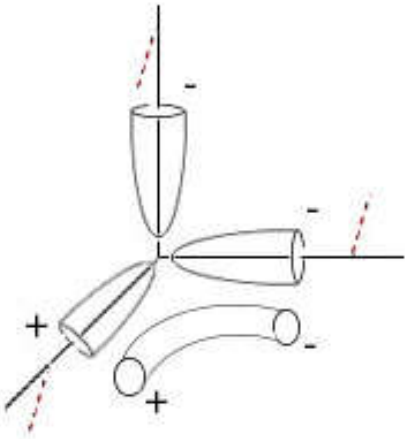

Figure 4.5. Analytic continuation in V_1 corresponds to moving L_1.

We can define the refined topological vertex as the coefficient, after choosing a basis as $P_R(U) = P_R(U; q, t)$ Macdonald functions:

$$C(V_1, V_2, V_3) = \sum_{R_1,R_2,R_3} C_{R_1R_2R_3}(q,t) P_{R_1}(V_1)/g_{R_1} P_{R_2}(V_2^{-1})/g_{R_2} P_{R_3}(V_3^{-1})/g_{R_3}$$

with

$$C_{R_1R_2R_3}(q,t) = \sum_R v^{-2|R|} g_R i P_{R_1/R}(t^{-\rho} q^{-R_3}) P_{R_2/R}(t^{\rho} q^{R_3}) P_{R_3}(t^{\rho}).$$

This corresponds to the refined topological vertex of [37]:

$$C_{R_1R_2R_3}(q,t) = C^{Awata-Kanno}_{R_1R_2R_3}(q,t).$$

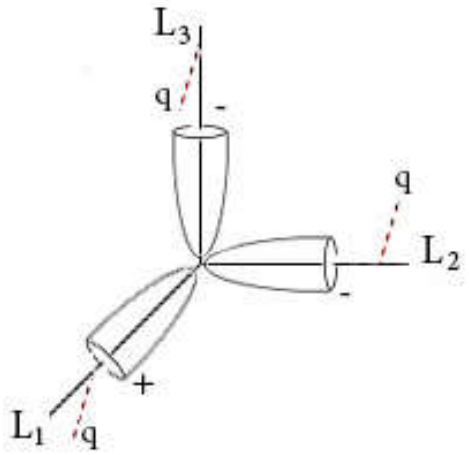

Figure 4.6. C^3 with the shown configuration of refined branes parametrized by q on Lagrangians L_1, L_2, L_3.

The refined topological vertex of Iqbal, Kozçaz, Vafa [11] is related to the refined vertex of Awata, Kanno [37] by a change of basis [32,38]. The Iqbal-Kozçaz-Vafa vertex can also be derived from the refined Chern-Simons theory following a process similar to the above and starting with a brane configuration as in the below Figure 4.7: branes parametrized by $\bar{t}$ on L_1 with opposite orientation, branes parametrized by q on L_2 but with an opposite orientation.

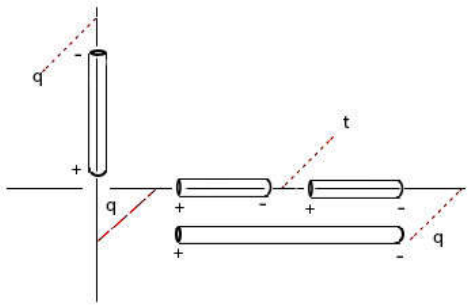

Figure 4.7. A different choice of brane configuration.

The partition function becomes [36]:

$$Z'_{SU(N)_q}(S^3; V_1, V_2, V_3) = \langle \mathcal{O}_{q\bar{t}}(U, V_1)\mathcal{O}_{q\bar{q}}(U, V_2)\mathcal{O}_{qq}(U, V_3)\rangle_{SU(N)_q}\mathcal{O}_{q\bar{t}}(V_1, V_2).$$

In the N to infinity limit, and applying analytical continuation:

$$C'(V_1, V_2, V_3) = \sum_{R_1,R_2,R_3} (-1)^{|R_1|}C_{R_1R_2R_3}(q,t)i\bar{P}_{R_1^T}(V_1; t^{-1}q^{-1})iP_{R_2}(V_2^{-1})/g_{R_2}P_{R_3}(V_3^{-1})/g_{R_3}.$$

Expanding this in terms of Schur functions, we get:

$$C'(V_1, V_2, V_3) = \sum_{R_1,R_2,R_3} C^{IKV}_{R_1R_2R_3}(q,t)s_{R_1}(V_1)s_{R_2}(V_2^{-1})P_{R_3}(V_3^{-1})/g_{R_3}\,,$$

$$C^{IKV}_{R_1R_2R_3}(q,t) = \sum_R (-\nu)^{|R|}s_{R_1^T/R}(t^{-rho}q^{-R_3})s_{R_2/R}(q^{rho}t^{R_3^T})P_{R_3}(t^\rho)\,.$$

This is the refined topological vertex of [11] with change a of framing on the second leg.

4.4. The Conjugate Vertex

We would have obtained a different vertex for the flopped S^3 in the Figure 4.8. Calculating the amplitude corresponds to the change: $(q,t) \to (q^{-1}, t^{-1})$ and $V_i \to V_i^{-1}$. Then, we find the partition function as:

$$\bar{C}(V_1, V_2, V_3) = \sum_{R_1,R_2,R_3} (q,t)\bar{C}_{R_1R_2R_3}P_{R_1}(V_1^{-1})/g_{R_1}P_{R_2}(V_2)/g_{R_2}P_{R_3}(V_3)/g_{R_3}\,,$$

$$\bar{C}_{R_1R_2R_3}(q,t) = \sum_R \bar{g}_R iP_{R_1/R}(t^\rho q^{R_3})P_{R_2/R}(t^{-\rho}q^{-R_3})P_{R_3}(t^{-\rho})\,.$$

Here $\bar{g}_R = \nu^{2|R|} g_R(q,t)$ [36]. This vertex corresponds to the brane configuration in the Figure 4.9.

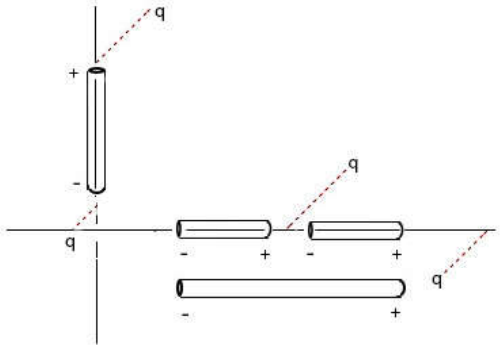

Figure 4.8. The brane configuration leading to the conjugate vertex.

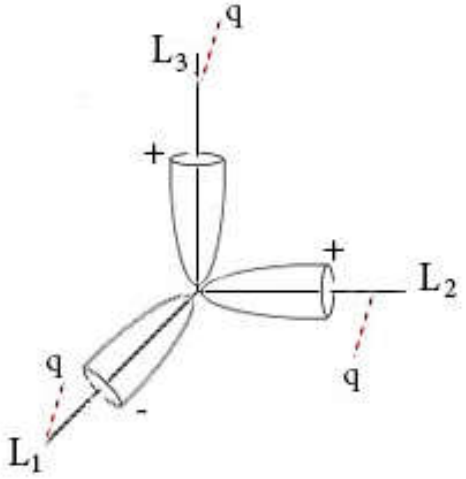

Figure 4.9. The conjugate vertex.

Notice that:

$$\bar{C}_{R_1 R_2 R_3}(q,t) = C_{R_1 R_2 R_3}(q^{-1}, t^{-1}).$$

4.5. The Local P^2

Using refined Chern-Simons theory, and large N duality, topological string amplitudes on compact Calabi-Yau manifolds can also be computed. Let us consider the toric diagram of local $\mathbb{P}^2$ given below with branes parametrized by q with the shown orientations.

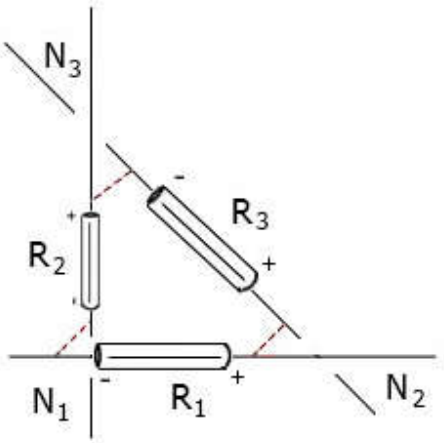

Figure 4.10. Local $\mathbb{P}^2$.

The edges of the diagram are: $\nu_1 = (1, 0)$, $\nu_2 = (0, 1)$, $\nu_3 = (-1, 1)$. The framing vectors are: $f_1 = (0, 1)$, $f_2 = (-1, 0)$, $f_1 = (0, -1)$.

Let us define $G(\Lambda)^{RQ} = \Lambda^{|Q|}/G_Q\delta^R_Q$. On the first and third edge, the propagators are

$$\mathcal{O}_{q\bar{q}}(V_i, V_j; \Lambda) = \sum_{RQ} iG(\Lambda)^{RQ} P_Q(V_i) P_R(V_j^{-1}).$$

On the second edge, we have

$$\mathcal{O}^*_{q\bar{q}}(V_2, V_1; \Lambda) = \sum_R G(\Lambda)^{RQ} P_R(V_2) P_R(V_1^{-1}) \,.$$

If we insert $P_R(U)$, $(P_R(U^{-1}) = P_{\bar{R}}(U))$, in a solid torus, it creates a state $|R\rangle$, $(|\bar{R}\rangle)$. Taking account of the $Sl(2,\mathbb{Z})$ transformations for gluing, the refined topological string amplitude is [36]:

$$\begin{aligned}
&\sum_{R_i, R_i'} iG^{R_1 R_1'}(\Lambda_1) iG^{R_3 R_3'}(\Lambda_3) G^{R_2 R_2'}(\Lambda_2) \\
&\times \langle R_3 | T S^{-1} T | R_1 \rangle_{SU(N_2)_q} \langle \bar{R}_2' | S | \bar{R}_1 \rangle_{SU(N_1)_q} \langle \bar{R}_3 | S^{-1} T^{-1} | R_2 \rangle_{SU(N_3)_q}
\end{aligned}$$

We can simplify the above equation with the notation $T^{-1} = \bar{T}$, $S^{-1} = \bar{S}$ where bar is for the operation $(q,t) \to (q^{-1}, t^{-1})$ .And using the properties of S, T matrices such as $S^4 = 1$, $ST^3 = S^2$ we can write the partition function before the geometric transition as:

$$Z_{N_1,N_2,N_3}(\Lambda) = \sum_{R_i R_i'} iG^{R_1 R_1'}(\Lambda_1) iG^{R_3 R_3'}(\Lambda_3) G^{R_2 R_2'}(\Lambda_2) (TST)^{N_2}_{R_3 R_1} (\bar{S})^{N_1}_{R_1 R_2} (\bar{T}\bar{S})^{N_3}_{R_2 R_3}$$

where

$$\langle R_3 | T S^{-1} T | R_1 \rangle_{SU(N_2)_q} = (TST)^{N_2}_{R_3 R_1} \,,$$

$$\langle \bar{R}_2' | S | \bar{R}_1 \rangle_{SU(N_1)_q} = (\bar{S})^{N_1}_{R_1 R_2} \,,$$

$$\langle \bar{R}_3 | S^{-1} T^{-1} | R_2 \rangle_{SU(N_3)_q} = (\bar{T}\bar{S})^{N_3}_{R_2 R_3} \,.$$

4.6. T Vertex

Following the refined topological vertex formalism, if we assign the preferred direction as one of the internal edges of the local $\mathbb{P}^2$ as in the image below, and put q, t parameters on the other legs, which is given by $(q,t) = (e^{i\epsilon_1}, e^{-i\epsilon_2})$, of the vertices, the upper one in the example below, has a different brane configuration which is not included in refined topological vertex formalism in [11].

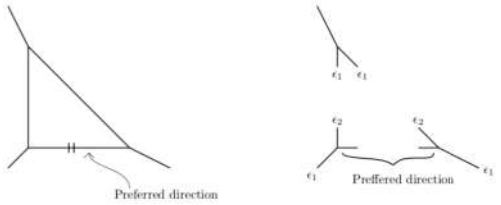

Figure 4.11. Assignment of $\epsilon_{1,2}$ parameters to the edges.

For this different brane configuration on the upper vertex, in [13], there is a new vertex proposed, $T_{\lambda\mu\nu}(t,q)$.

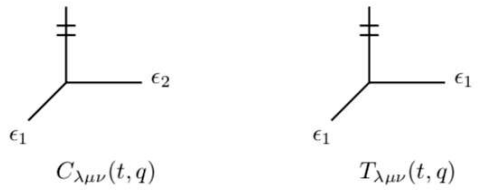

Figure 4.12. The two vertices need for local $\mathbb{P}^2$.

This new vertex is determined after calculating the refined partition function for the local $\mathbb{P}^2$ using its blown up version [11]:

$$Z_{\mathbb{P}^2}(Q_H) = \sum_{\lambda\mu\nu}(-Q_H)^{|\lambda|+|\mu|+|\nu|}q^{3||\nu^t||^2/2}t^{-||\nu||^2/2}\tilde{Z}_\nu(q,t)\tilde{Z}_{\nu^t}(t,q)s_\lambda(q^{-\rho}t^{-\nu})s_\mu(q^{-\rho}t^{-\nu})$$
$$\times(\frac{q}{t})^{\frac{|\lambda|-|\mu|}{2}}[\sum_{\eta\sigma}N^\eta_{\lambda\mu}U_\eta t^{||\sigma^t||^2/2}q^{-||\sigma||^2/2}P_\sigma(t^{-\rho};q,t)]\,.$$

Let us express this in terms of the vertices:

$$Z_{\mathbb{P}^2}(Q_H) = \sum_{\lambda\mu\nu}(-Q_H)^{|\lambda|+|\mu|+|\nu|}(f_\nu(q,t)\tilde{f}_\lambda(t,q)\tilde{f}_\mu(q,t))^2C_{\emptyset\lambda\nu^t}(t,q)C_{\mu^t\emptyset\nu}(q,t)T_{\mu\lambda^t\emptyset}(t,q)\,.$$

Then, we can have the following expression for the new vertex $T_{\lambda\mu\emptyset}$,

$$T_{\lambda\mu\emptyset}(t,q) = (-1)^{|\mu|}f_\mu(q,t)f^2_{\lambda^t}(t,q)\sum_{\eta\sigma}N^\eta_{\lambda\mu^t}U_{\eta\sigma}(q,t)f_\sigma P_\sigma(t^{-\rho};q,t)\,.$$

This method can be applied to the geometries which contain $\mathbb{P}^2$ as a divisor [13].

4.7. An Outline of Deriving T Vertex from Refined Chern-Simon Theory

In this section we will outline the way of deriving the vertex of [13] from the refined Chern-Simons theory calculations of [14].

Let us consider the amplitude calculated in [14] and write it in terms of S matrices. We have

$$Z_{N_1,N_2,N_3}(\Lambda) = \sum_{R_iR_i'}iG^{R_1R_1'}(\Lambda_1)iG^{R_3R_3'}(\Lambda_3)G^{R_2R_2'}(\Lambda_2)(TST)^{N_2}_{R_3R_1}(\bar{S})^{N_1}_{R_1R_2}(\bar{T}\bar{S})^{N_3}_{R_2R_3}\,.$$

Let us write constituents of this amplitude in terms of S matrices [35] and framing factors explicitly:

$$\langle \bar{R}_3|TST|R_1\rangle = f_{R_3}(t,q) f_{R_1}(t,q) S_{R_3 R_1} \,,$$

$$\langle \bar{R}_3|S^{-1}T^{-1}|R_2\rangle = f^{-1}_{R_2}(t,q) S_{R_3 R_1} \,,$$

$$\langle \bar{R}_1|S^{-1}|R_2\rangle = S^{-1}_{R_1 R_2} \,.$$

Let us pause here and consider the partition function, $Z_{\mathbb{P}^2}(Q_H)$, used to define the new vertex of [13]. We can rewrite the expression for $Z_{\mathbb{P}^2}(Q_H)$ above, by replacing $\tilde{Z}_\nu(q,t) = q^{-||\nu^t||^2/2} P_\nu(q^{-\rho};t,q)$ and $\tilde{Z}_{\nu^t}(t,q) = t^{-||\nu||^2/2} P_{\nu^t}(t^{-\rho};q,t)$ in terms of Macdonald functions. Then we have:

$$\begin{aligned} Z_{\mathbb{P}^2}(Q_H) = \sum_{\lambda\mu\nu} (-Q_H)^{|\lambda|+|\mu|+|\nu|} q^{||\nu^t||^2} t^{-||\nu||^2} P_\nu(q^{-\rho};t,q) P_{\nu^t}(t^{-\rho};q,t) s_\lambda(q^{-\rho}t^{-\nu}) s_\mu(q^{-\rho}t^{-\nu}) \\ \times \left(\frac{q}{t}\right)^{\frac{|\lambda|-|\mu|}{2}} \left[\sum_{\eta\sigma} N^\eta_{\lambda\mu} U_\eta \, t^{||\sigma^t||^2/2} \, q^{-||\sigma||^2/2} P_\sigma(t^{-\rho};q,t) \right] . \end{aligned}$$

We can obtain two of the S matrices using $S_{\mu\nu} = P_\mu(t^\rho) P_\nu(t^\rho q^\mu)$ [35] and expanding the Schur functions with $s_\eta = \sum_\sigma U_{\eta\sigma} P_\sigma$ and then pairing up the Macdonald functions. With the U matrices introduced we can expand the Macdonald function in the expression in the parenthesis in terms of two Macdonald functions $\sum_\eta \hat{N}^\eta_{\lambda\mu} P_\eta = P_\lambda P_\mu$ also using (B.3) of [32]. Notice that, the non-diagonal terms that necessarily appear because of the structure of local $\mathbb{P}^2$ comes from $iG^{R_i R_i'}$ terms in refined Chern-Simons theory formulation of [14] and put into T vertex of [13].

5. CONCLUSION

Starting with a brief review on topological string theory and large N duality we have studied Chern-Simons theory calculations which is used to derive topological vertex. We have studied refined topological vertex formalism and emphasized it does not include compact toric Calabi-Yau geometries. We talked about two ways generalizing refined topological vertex formalism to also include compact toric Calabi-Yau geometries. One of them is using refined Chern-Simons theory and geometric transition similar to development led to the topological vertex, and the other one is defining a new vertex for the vertices refined topological vertex formalism of Iqbal-Kozçaz-Vafa does not allow. In this thesis an outline of the derivation of this new vertex from the refined Chern-Simons theory amplitudes is illustrated.

REFERENCES

1. Katz, S., A. Klemm and C. Vafa, "Geometric Engineering of Quantum Field Theories", *Nuclear Physics B*, Vol. 497, No. 1-2, pp. 173–195, 1997.

2. Neitzke, A. and C. Vafa, "Topological Strings and Their Physical Applications", *arXiv Preprint hep-th/0410178*, 2004.

3. Vonk, M., "A Mini-course on Topological Strings", *arXiv Preprint hep-th/0504147*, 2005.

4. Hori, K., S. Katz, R. Pandharipande, R. Vakil and E. Zaslow, *Mirror Symmetry*, Vol. 1, American Mathematical Soc., 2003.

5. Marino, M., "Chern-Simons Theory and Topological Strings", *Reviews of Modern Physics*, Vol. 77, No. 2, p. 675, 2005.

6. Labastida, J. and P. Llatas, "Topological Matter in Two Dimensions", *Nuclear Physics B*, Vol. 379, No. 1-2, pp. 220–258, 1992.

7. Aganagic, M., A. Klemm, M. Marino and C. Vafa, "The Topological Vertex", *Communications in Mathematical Physics*, Vol. 254, No. 2, pp. 425–478, 2005.

8. Hollowood, T., A. Iqbal and C. Vafa, "Matrix Models, Geometric Engineering and Elliptic Genera", *Journal of High Energy Physics*, Vol. 2008, No. 03, p. 069, 2008.

9. Nekrasov, N. A. and Others, "Seiberg-Witten Prepotential from Instanton Counting", *Advances in Theoretical and Mathematical Physics*, Vol. 7, pp. 831–864, 2003.

10. Dijkgraaf, R., C. Vafa and E. Verlinde, "M-theory and A Topological String Duality", *arXiv Preprint hep-th/0602087*, 2006.

11. Iqbal, A., C. Kozcaz and C. Vafa, "The Refined Topological Vertex", *Journal of High Energy Physics*, Vol. 2009, No. 10, p. 069, 2009.

12. Okounkov, A., N. Reshetikhin and C. Vafa, "Quantum Calabi-Yau and Classical Crystals", *The Unity of Mathematics*, pp. 597–618, Springer, 2006.

13. Iqbal, A. and C. Kozcaz, "Refined Topological Strings and Toric Calabi-Yau Threefolds", *arXiv Preprint arXiv:1210.3016*, 2012.

14. Aganagic, M. and S. Shakirov, "Refined Chern-Simons Theory and Topological String", *arXiv Preprint arXiv:1210.2733*, 2012.

15. Bershadsky, M., S. Cecotti, H. Ooguri and C. Vafa, "Kodaira-Spencer Theory of Gravity and Exact Results for Quantum String Amplitudes", *Communications in Mathematical Physics*, Vol. 165, No. 2, pp. 311–427, 1994.

16. Kontsevich, M., "Enumeration of Rational Curves via Torus Actions", *The Moduli Space of Curves*, pp. 335–368, Springer, 1995.

17. 't Hooft, G., "A Planar Diagram Theory for Strong Interactions", *The Large N Expansion In Quantum Field Theory And Statistical Physics: From Spin Systems to 2-Dimensional Gravity*, pp. 80–92, World Scientific, 1993.

18. Atiyah, M., "On Framings of 3-manifolds", *Topology*, Vol. 29, No. 1, pp. 1–7, 1990.

19. Witten, E., "Quantum Field Theory and The Jones Polynomial", *Communications in Mathematical Physics*, Vol. 121, No. 3, pp. 351–399, 1989.

20. Witten, E., "Chern-Simons Gauge Theory as A String Theory", *The Floer Memorial Volume*, pp. 637–678, Springer, 1995.

21. Gopakumar, R. and C. Vafa, "On the Gauge Theory/Geometry Correspondence", *arXiv Preprint hep-th/9811131*, 1998.

22. Diaconescu, D.-E., B. Florea and A. Grassi, "Geometric Transitions and Open String Instantons", *arXiv Preprint hep-th/0205234*, 2002.

23. Diaconescu, D.-E., B. Florea and A. Grassi, "Geometric Transitions, Del Pezzo Surfaces and Open String Instantons", *arXiv Preprint hep-th/0206163*, 2002.

24. Aganagic, M., M. Marino and C. Vafa, "All Loop Topological String Amplitudes from Chern-Simons Theory", *Communications in Mathematical Physics*, Vol. 247, No. 2, pp. 467–512, 2004.

25. Witten, E., "Topological Sigma Models", *Communications in Mathematical Physics*, Vol. 118, No. 3, pp. 411–449, 1988.

26. Iqbal, A., "All Genus Topological String Amplitudes and 5-brane Webs as Feynman Diagrams", *arXiv Preprint hep-th/0207114*, 2002.

27. Iqbal, A., A.-K. Kashani-Poor and Others, "Instanton Counting and Chern-Simons Theory", *Advances in Theoretical and Mathematical Physics*, Vol. 7, No. 3, pp. 457–497, 2003.

28. Harvey, R. and H. B. Lawson, "Calibrated Geometries", *Acta Mathematica*, Vol. 148, pp. 47–157, 1982.

29. Marino, M. and C. Vafa, "Framed Knots at Large N", *arXiv Preprint hep-th/0108064*, 2001.

30. Ooguri, H. and C. Vafa, "Worldsheet Derivation of a Large N Duality", *Nuclear Physics B*, Vol. 641, No. 1-2, pp. 3–34, 2002.

31. Verlinde, E., "Fusion Rules and Modular Transformations in 2D Conformal Field Theory", *Nuclear Physics B*, Vol. 300, pp. 360–376, 1988.

32. Iqbal, A. and C. Kozçaz, "Refined Hopf Link Revisited", *Journal of High Energy*

Physics, Vol. 2012, No. 4, pp. 1–19, 2012.

33. Macdonald, I. G., *Symmetric Functions and Hall Polynomials*, Oxford University Press, 1998.

34. Nakajima, H. and K. Yoshioka, "Instanton Counting on Blowup. I. 4-dimensional Pure Gauge Theory", *Inventiones Mathematicae*, Vol. 162, No. 2, pp. 313–355, 2005.

35. Aganagic, M. and S. Shakirov, "Knot Homology from Refined Chern-Simons Theory", *arXiv Preprint arXiv:1105.5117*, 2011.

36. Aganagic, M., S. Shakirov, J. Block, J. Distler, R. Donagi and E. Sharpe, "Refined Chern-Simons Theory and Knot Homology", *String-Math 2011*, Vol. 85, pp. 3–31, 2011.

37. Awata, H. and H. Kanno, "Instanton Counting, Macdonald Function and The Moduli Space of D-branes", *Journal of High Energy Physics*, Vol. 2005, No. 05, p. 039, 2005.

38. Awata, H., B. Feigin and J. Shiraishi, "Quantum Algebraic Approach to Refined Topological Vertex", *Journal of High Energy Physics*, Vol. 2012, No. 3, pp. 1–35, 2012.

APPENDIX A: COPYRIGHT PERMISSIONS

Copyright permissions for Figures 2.1-8 and 3.1-4 are obtained from American Physical Society and the license document can be found below.

Figure 4.1-2 are from the article [11].

Figure 4.3-10 are from the article [14].

Figure 4.11-12 are from the article [13].

American Physical Society
Reuse and Permissions License

23-Jan-2022

This license agreement between the American Physical Society ("APS") and Bilal Çark ("You") consists of your license details and the terms and conditions provided by the American Physical Society and SciPris.

Licensed Content Information

License Number:	**RNP/22/JAN/049504**
License date:	23-Jan-2022
DOI:	10.1103/RevModPhys.77.675
Title:	Chern-Simons theory and topological strings
Author:	Marcos Mariño
Publication:	Reviews of Modern Physics
Publisher:	American Physical Society
Cost:	USD $ 0.00

Request Details

Does your reuse require significant modifications: No

Specify intended distribution locations:	Turkey - just several printed copies
Reuse Category:	Reuse in a thesis/dissertation
Requestor Type:	Student
Items for Reuse:	Figures/Tables
Number of Figure/Tables:	12
Figure/Tables Details:	Fig 6, 7, 8, 9, 10, 16, 17, 19, 20, 22, 23, 24
Format for Reuse:	Print and Electronic
Total number of print copies:	Up to 1000

Information about New Publication:

University/Publisher:	Boğaziçi Üniversitesi
Title of dissertation/thesis:	REFINED GEOMETRIC TRANSITION AND LOCAL P2
Author(s):	Bilal Çark
Expected completion date:	Jan. 2022

License Requestor Information

Name:	Bilal Çark
Affiliation:	Individual
Email Id:	bilalcark@gmail.com
Country:	Turkey

American Physical Society
Reuse and Permissions License

TERMS AND CONDITIONS

The American Physical Society (APS) is pleased to grant the Requestor of this license a non-exclusive, non-transferable permission, limited to Print and Electronic format, provided all criteria outlined below are followed.

1. You must also obtain permission from at least one of the lead authors for each separate work, if you haven't done so already. The author's name and affiliation can be found on the first page of the published Article.
2. For electronic format permissions, Requestor agrees to provide a hyperlink from the reprinted APS material using the source material's DOI on the web page where the work appears. The hyperlink should use the standard DOI resolution URL, http://dx.doi.org/{DOI}. The hyperlink may be embedded in the copyright credit line.
3. For print format permissions, Requestor agrees to print the required copyright credit line on the first page where the material appears: "Reprinted (abstract/excerpt/figure) with permission from [(FULL REFERENCE CITATION) as follows: Author's Names, APS Journal Title, Volume Number, Page Number and Year of Publication.] Copyright (YEAR) by the American Physical Society."
4. Permission granted in this license is for a one-time use and does not include permission for any future editions, updates, databases, formats or other matters. Permission must be sought for any additional use.
5. Use of the material does not and must not imply any endorsement by APS.
6. APS does not imply, purport or intend to grant permission to reuse materials to which it does not hold copyright. It is the requestor's sole responsibility to ensure the licensed material is original to APS and does not contain the copyright of another entity, and that the copyright notice of the figure, photograph, cover or table does not indicate it was reprinted by APS with permission from another source.
7. The permission granted herein is personal to the Requestor for the use specified and is not transferable or assignable without express written permission of APS. This license may not be amended except in writing by APS.
8. You may not alter, edit or modify the material in any manner.
9. You may translate the materials only when translation rights have been granted.
10. APS is not responsible for any errors or omissions due to translation.
11. You may not use the material for promotional, sales, advertising or marketing purposes.
12. The foregoing license shall not take effect unless and until APS or its agent, Aptara, receives payment in full in accordance with Aptara Billing and Payment Terms and Conditions, which are incorporated herein by reference.
13. Should the terms of this license be violated at any time, APS or Aptara may revoke the license with no refund to you and seek relief to the fullest extent of the laws of the USA. Official written notice will be made using the contact information provided with the permission request. Failure to receive such notice will not nullify revocation of the permission.
14. APS reserves all rights not specifically granted herein.
15. This document, including the Aptara Billing and Payment Terms and Conditions, shall be the entire agreement between the parties relating to the subject matter hereof.